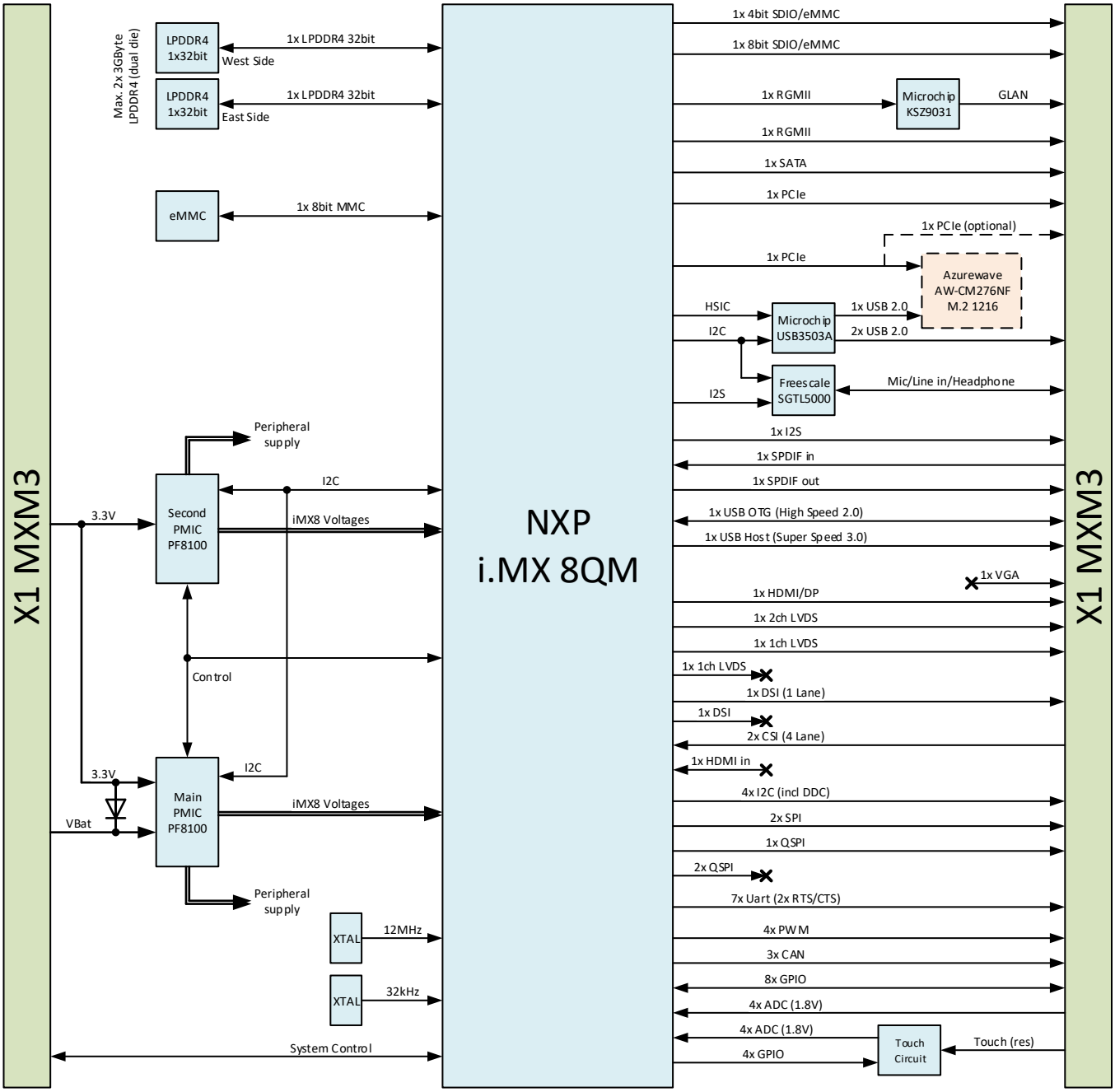
X1 MXM3
Max. 2x 3GByte LPDDR4 (dual die)
LPDDR4 1x32bit
1x LPDDR4 32bit
West Side
LPDDR4 1x32bit
1x LPDDR4 32bit
East Side
eMMC
1x 8bit MMC
3.3V
Second PMIC PF8100
Peripheral supply
I2C
iMX8 Voltages
Control
3.3V
VBat
Main PMIC PF8100
I2C
iMX8 Voltages
Peripheral supply
XTAL
12MHz
XTAL
32kHz
System Control
NXP
i.MX 8QM
1x 4bit SDIO/eMMC
1x 8bit SDIO/eMMC
1x RGMII
Microchip KSZ9031
GLAN
1x RGMII
1x SATA
1x PCIe
1x PCIe (optional)
1x PCIe
Azurewave AW-CM276NF M.2 1216
HSIC
Microchip USB3503A
1x USB 2.0
I2C
2x USB 2.0
Freescale SGTL5000
Mic/Line in/Headphone
I2S
1x I2S
1x SPDIF in
1x SPDIF out
1x USB OTG (High Speed 2.0)
1x USB Host (Super Speed 3.0)
1x VGA
1x HDMI/DP
1x 2ch LVDS
1x 1ch LVDS
1x 1ch LVDS
1x DSI (1 Lane)
1x DSI
2x CSI (4 Lane)
1x HDMI in
4x I2C (incl DDC)
2x SPI
1x QSPI
2x QSPI
7x Uart (2x RTS/CTS)
4x PWM
3x CAN
8x GPIO
4x ADC (1.8V)
4x ADC (1.8V)
4x GPIO
Touch Circuit
Touch (res)
X1 MXM3