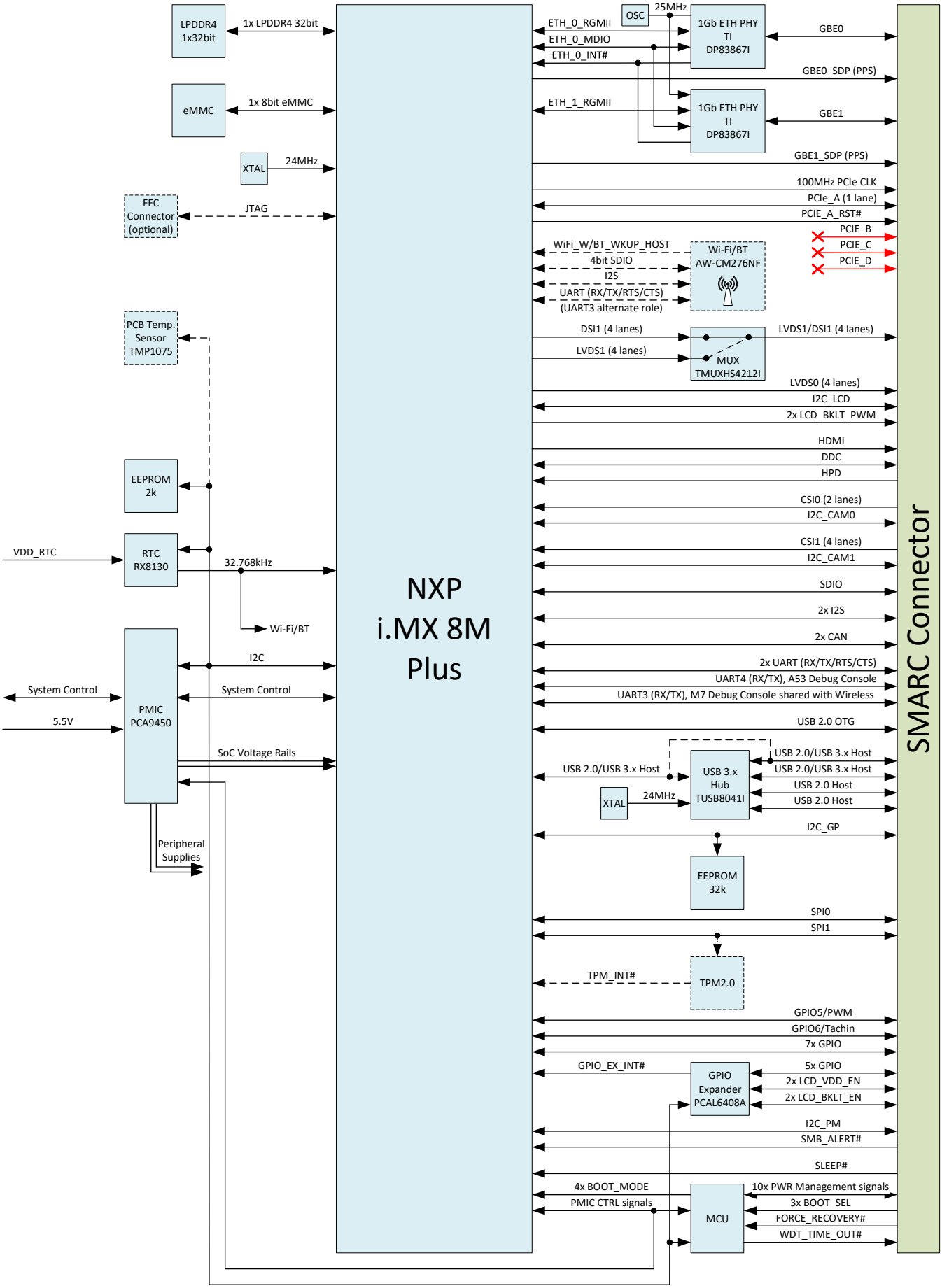SMARC iMX8M Plus V1.0 Block Diagram